BMC513_Evaluation(Tenor)_Board_Ver1.2

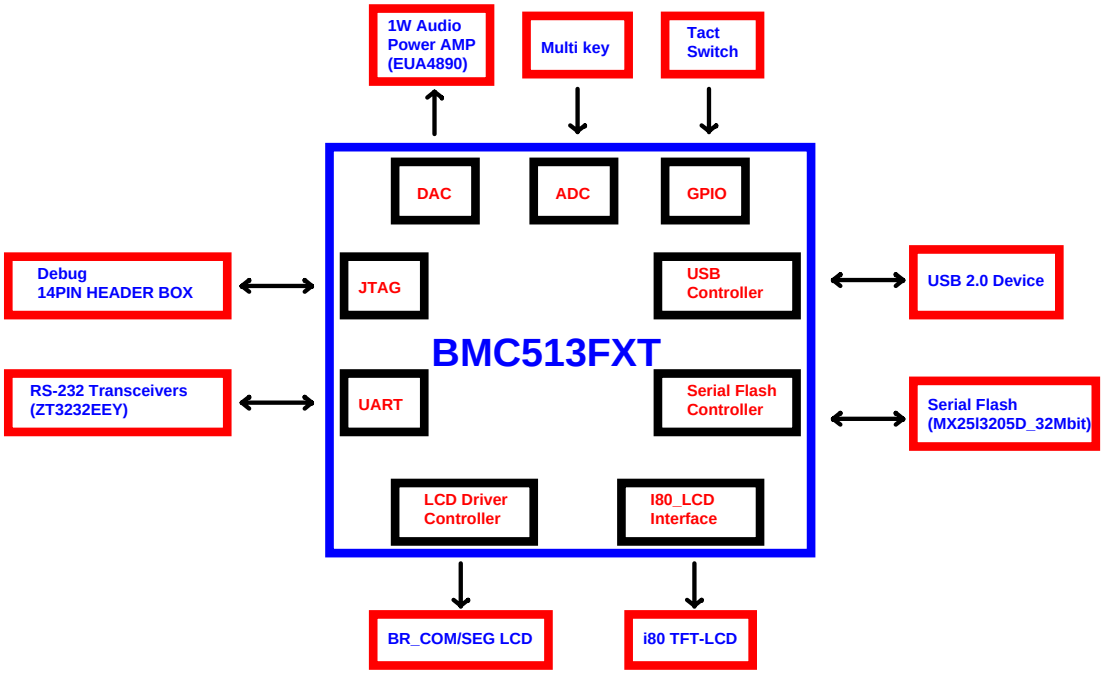

■ VER.1.2 Note

1. J201~J204 HEADER 수정
   [10X2 HEADER]->[9X2 HEADER]
2. 80TQFP PAD 삭제

Title	BMC513_Evaluation(Tenor)_Board_Ver1.2	
Size B	Document Number 00_Block Diagram	Rev 1.2
Date: Tuesday, June 15, 2010	Sheet 0 of 6	

POWER

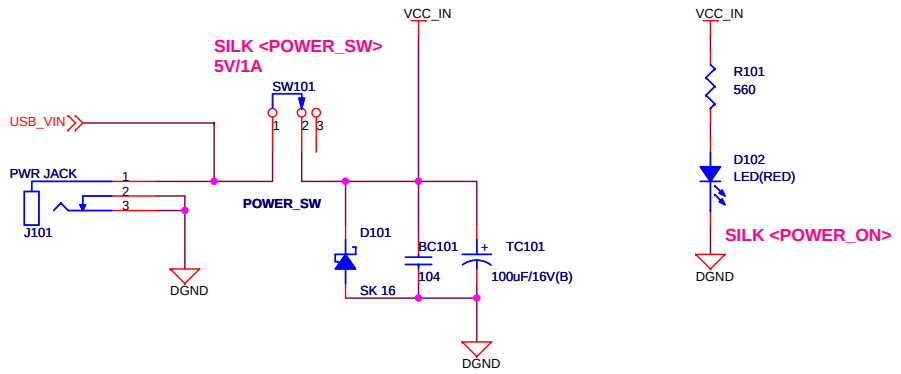

RESET SW

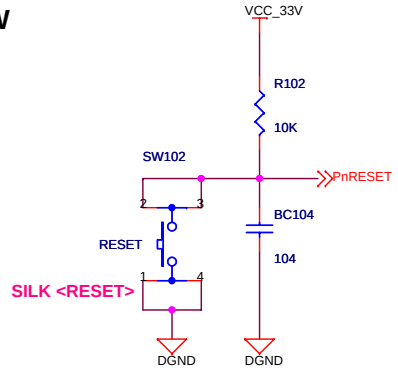

LDO 3.3V OUT

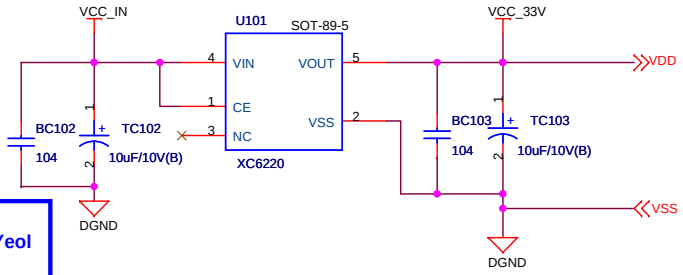

Contact Point
HVK CO..LTD. Bruce / Yoo,Woo-Yeol
Tel : +82-2-784-7464
mobile : +82-10-2918-7371
e-mail : hvk@hvk.co.kr

POWER MIX

1608 SIZE BEAD

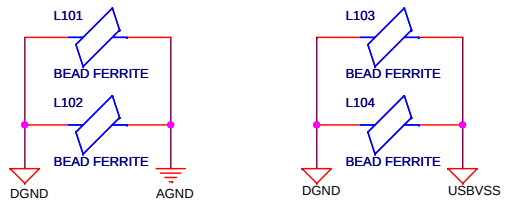

BYPASS CAP

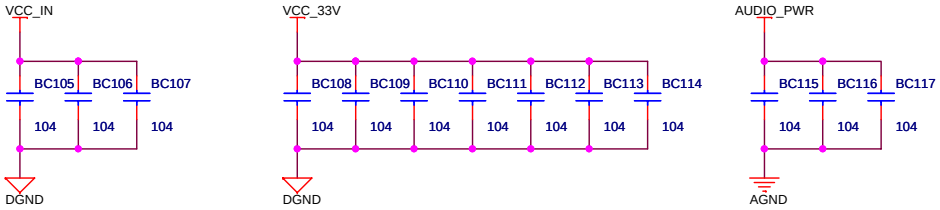

LED Control

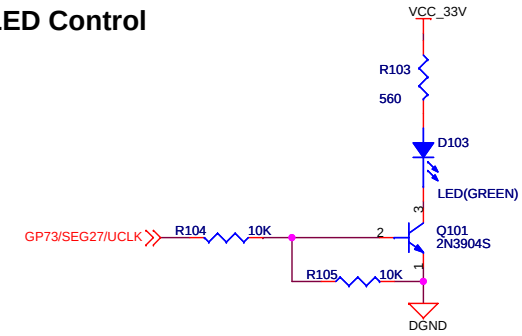

Title	**BMC513_Evaluation(Tenor)_Board_Ver1.2**
Size B	Document Number **01_POWER/RESET/TIMER LED**
Rev 1.2	
Date: Thursday, November 25, 2010	Sheet 1 of 6

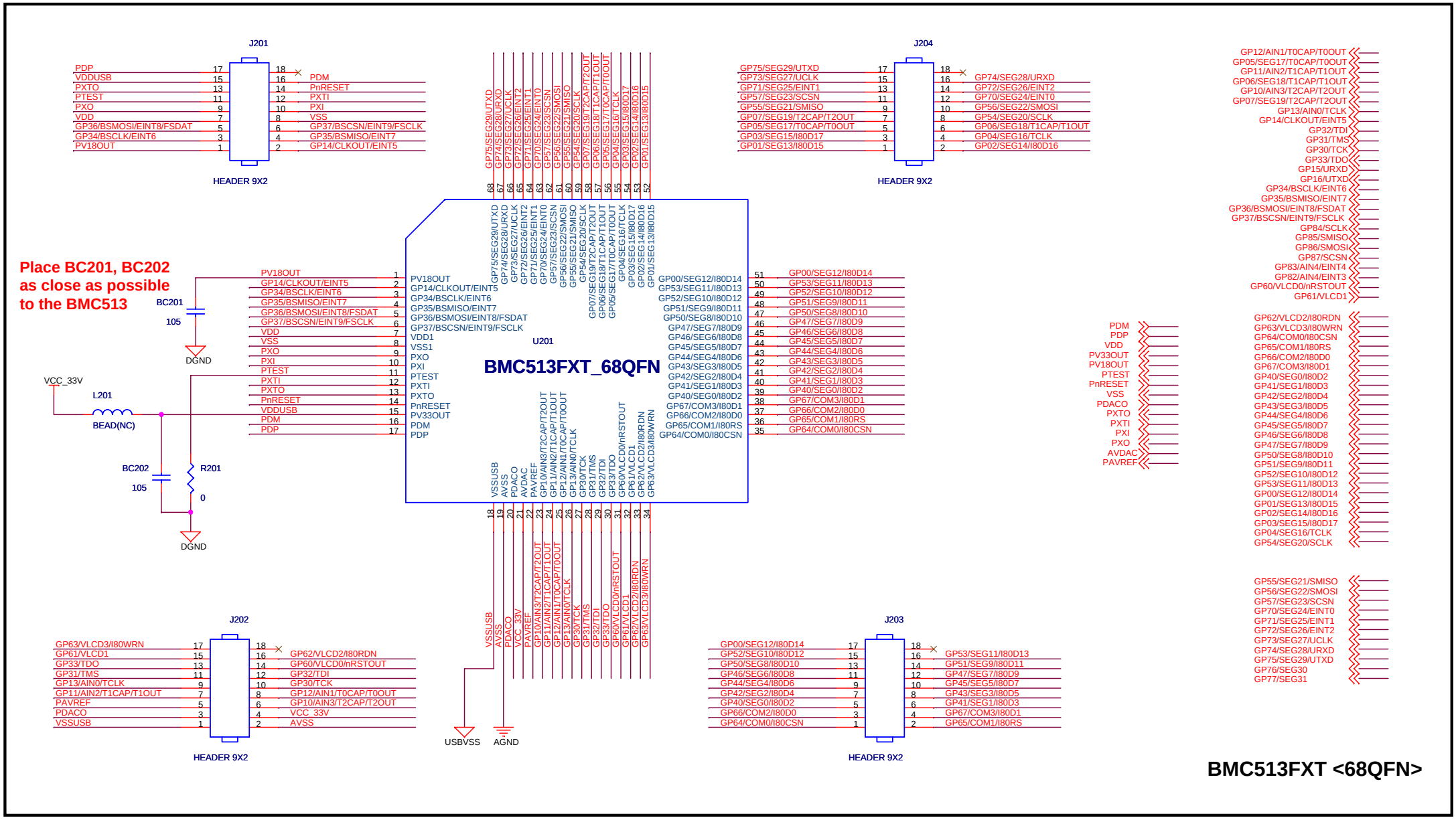

Title	BMC513_Evaluation(Tenor)_Board_Ver1.2		
Size B	Document Number 02_BMC513FXT		Rev 1.2
Date: Thursday, November 25, 2010	Sheet 2 of 6		

Contact Point
HVK CO.,LTD. Bruce / Yoo,Woo-Yeol
Tel : +82-2-784-7464
mobile : +82-10-2918-7371
e-mail : hvk@hvk.co.kr

ANALOG VOLTAGE INPUT

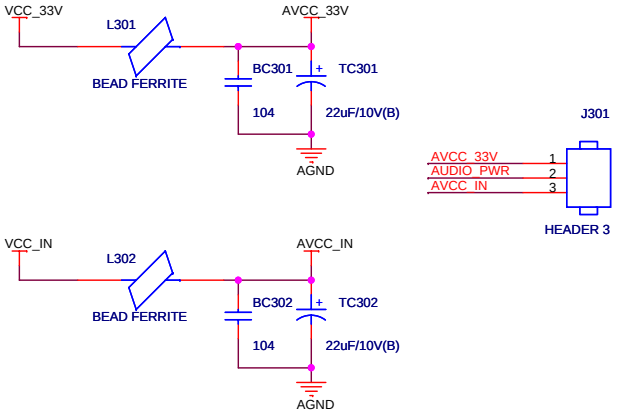

AUDIO AMP OUT

SOD-123 PACKAGE

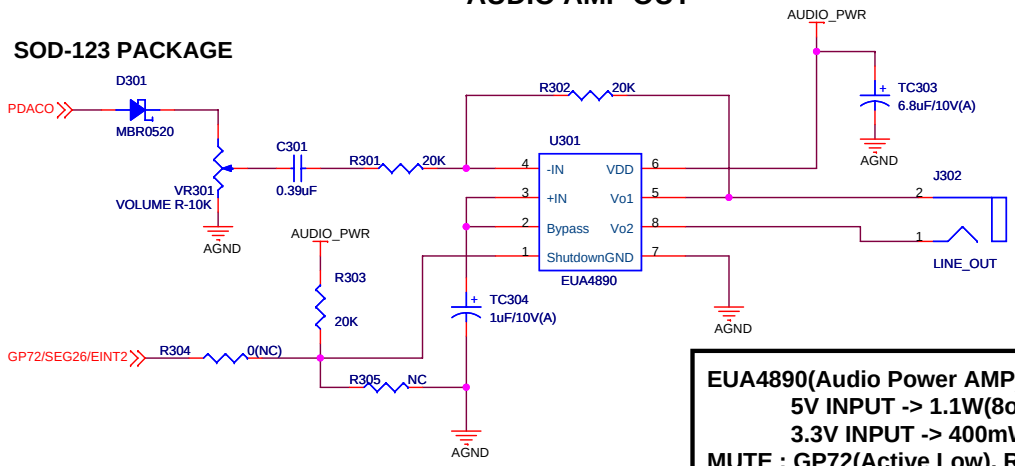

EUA4890(Audio Power AMP)
5V INPUT -> 1.1W(8ohm)
3.3V INPUT -> 400mW(8ohm)
MUTE : GP72(Active Low), R304 Close

GPIO_KEY

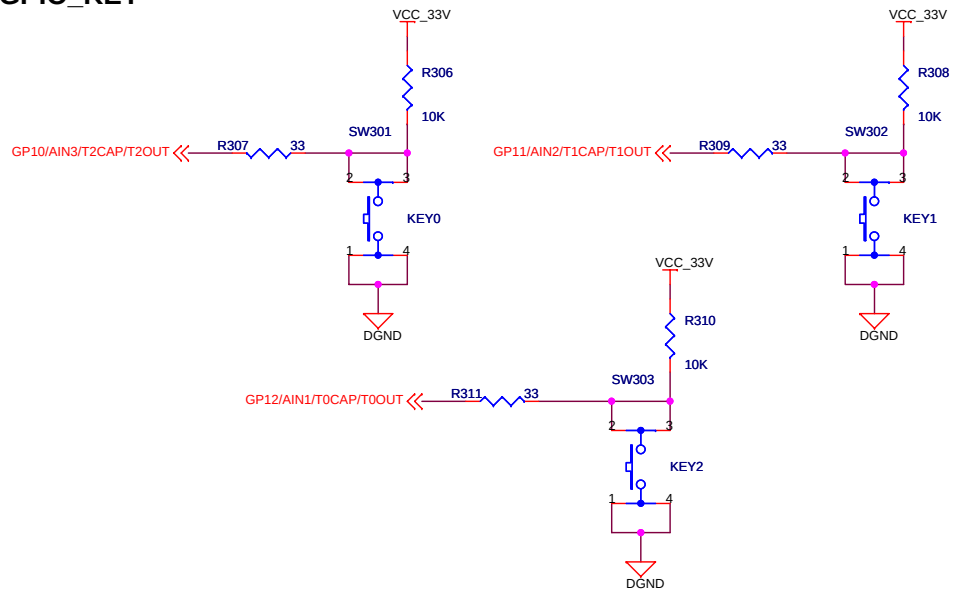

ADC_KEY

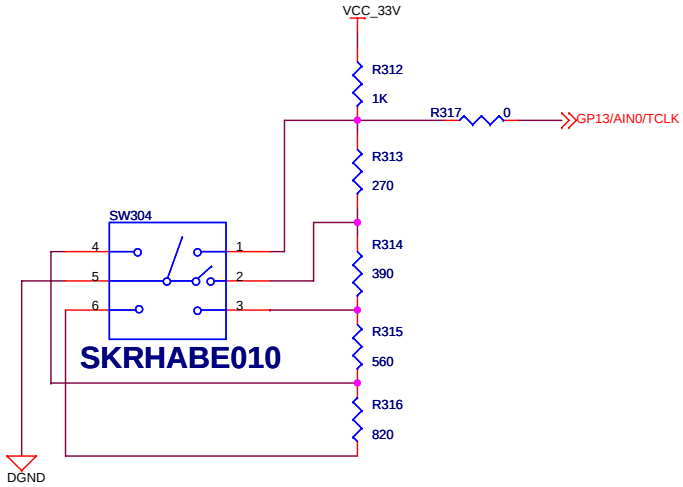

Title	BMC513_Evaluation(Tenor)_Board_Ver1.2
Size B	Document Number 03_DAC OUT WITH AUDIO AMP / KEY
Rev 1.2	
Date: Thursday, June 10, 2010	Sheet 3 of 6

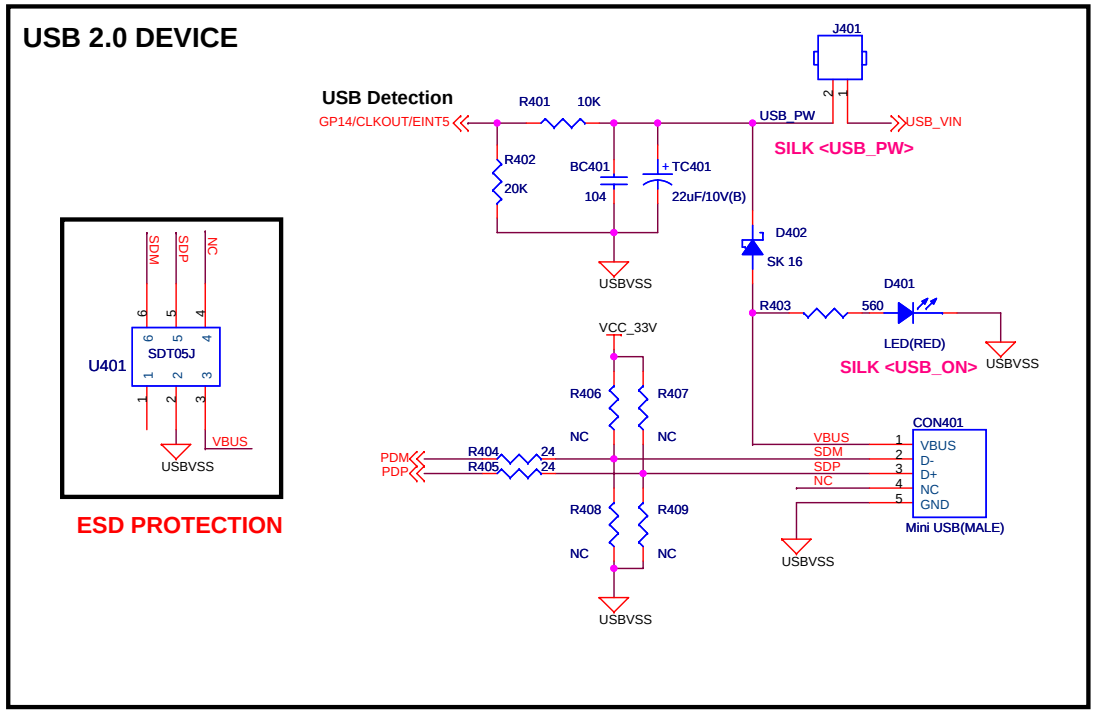

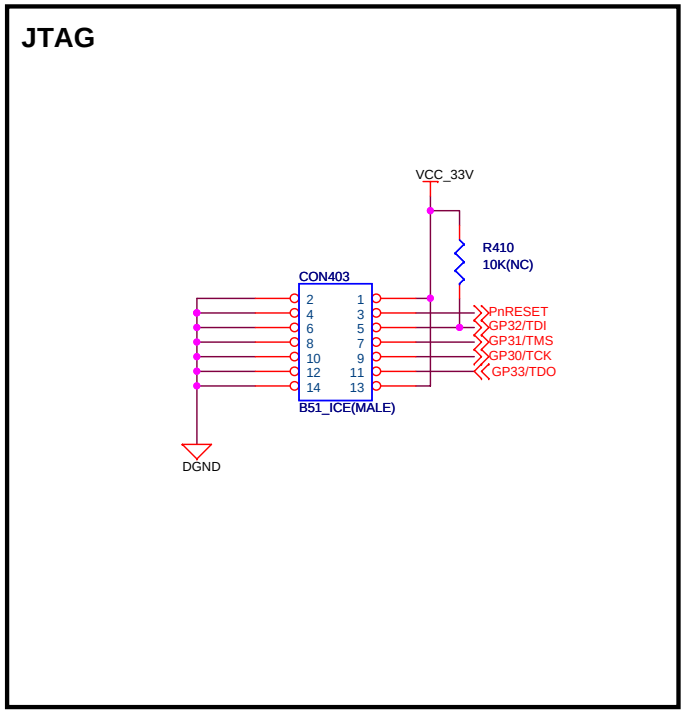

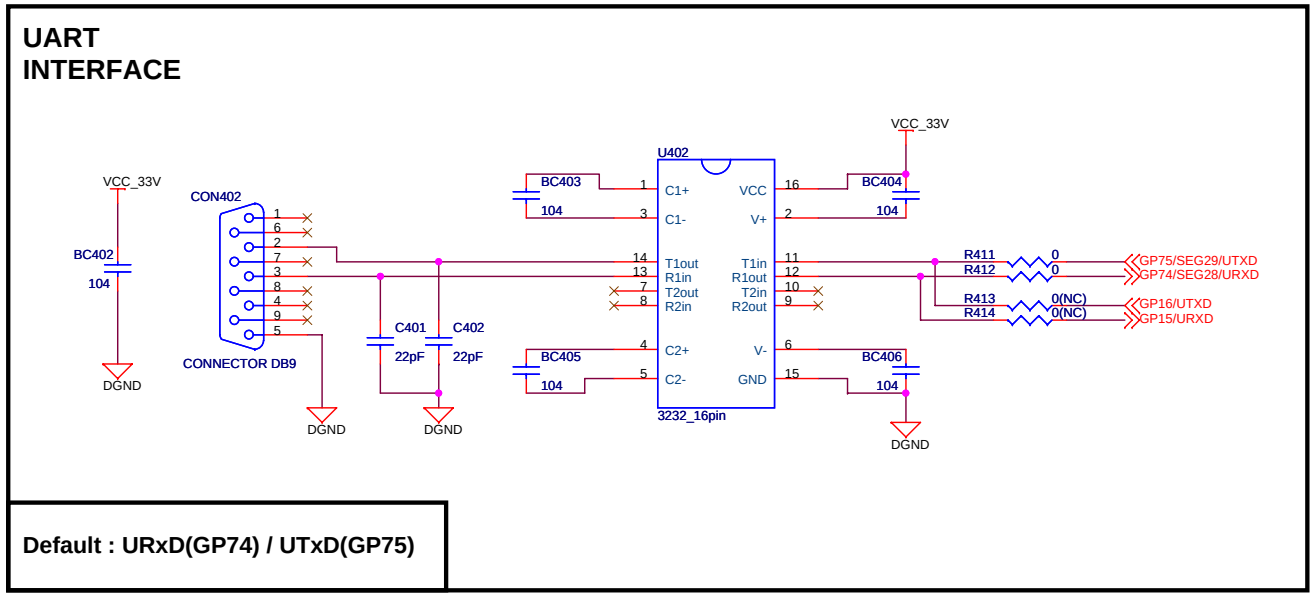

Default : URxD(GP74) / UTxD(GP75)

Title	BMC513_Evaluation(Tenor)_Board_Ver1.2
Size B	Document Number 04_USB2.0 DEVICE/UART/JTAG
Rev 1.2	
Date: Monday, June 07, 2010	Sheet 4 of 6

SERIAL FLASH

Contact Point
FairView Inc I.C.Choi
Tel : +82-2-3413-5317
mobile : +82-19-663-3722
e-mail : icchoi@fairview.kr

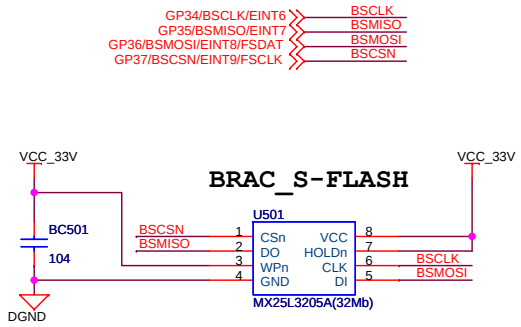

COM·SEG

SILK <COM_SEG>

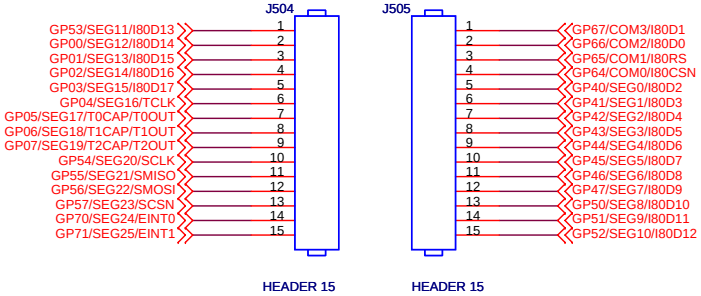

Default : Boo-Ree 30Pin LCD (COM4/SEG26)

I80 DISPLAY

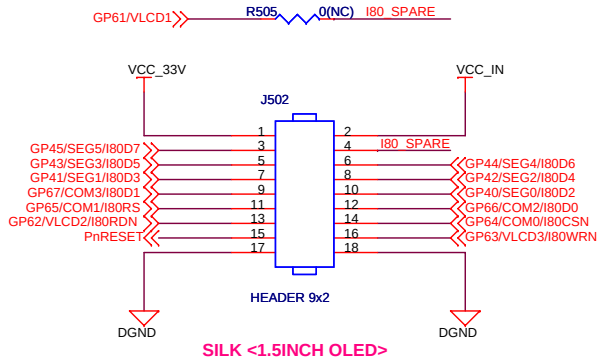

SILK <1.5INCH OLED>

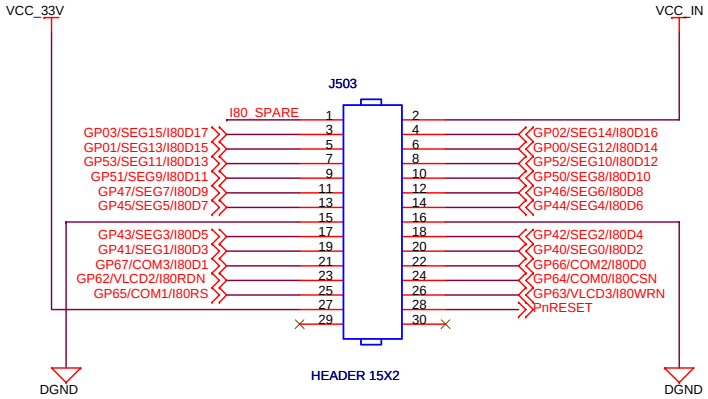

SILK <I80_18bit EXPANSION>

J502 : 1.5 Inch OLED Board
J503 : Expansion(i80_18bit)

Title	**BMC513_Evaluation(Tenor)_Board_Ver1.2**	
Size B	Document Number **05_S-Flash/Display**	Rev 1.2
Date: Monday, June 07, 2010	Sheet 5 of 6	

CLOCK

TEST POINT

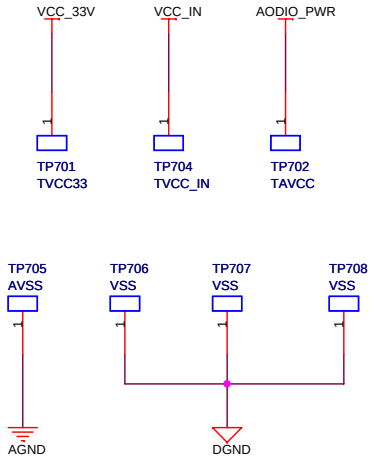

HOLE

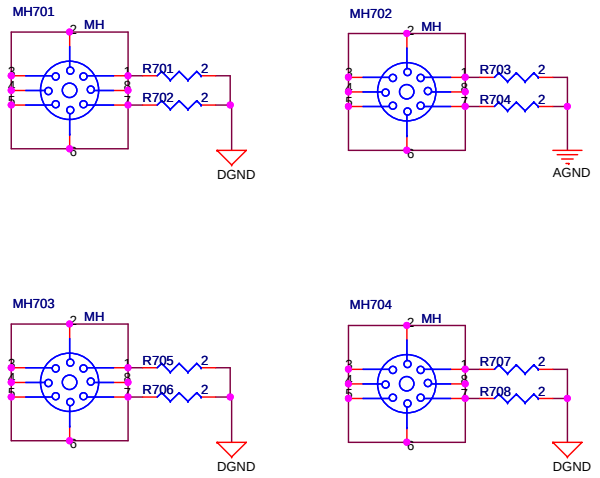

Title	BMC513_Evaluation(Tenor)_Board_Ver1.2	
Size B	Document Number 06_CLOCK/TEST-POINT/ETC	Rev 1.2
Date: Tuesday, June 15, 2010	Sheet 6 of 6	